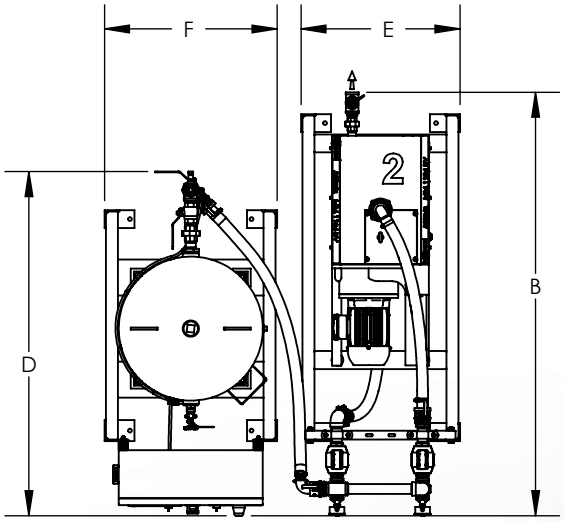

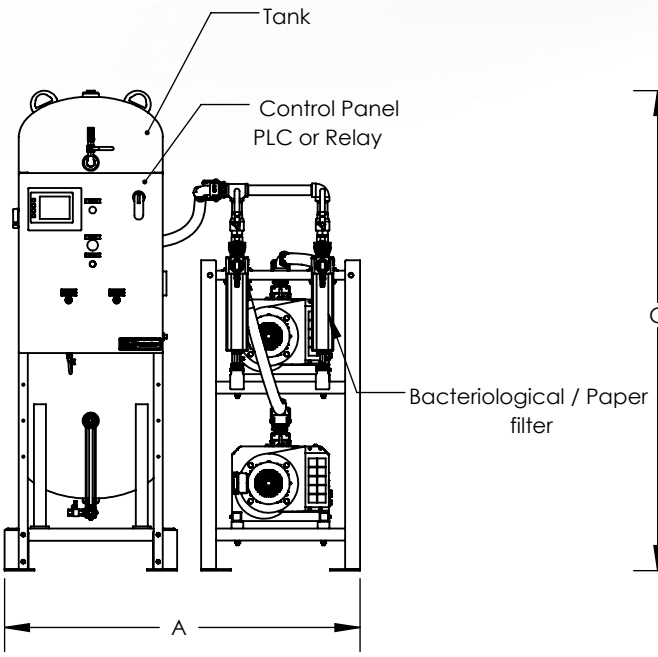

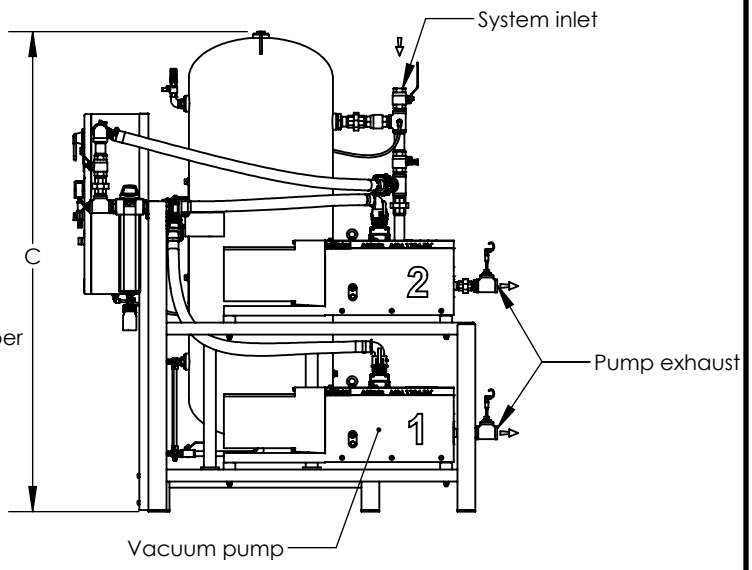

			Capacity *(per pump)	Dimensions						Connections		Total weight (lbs / Kg)
System	Hp	Tank (Gallons)	@20"Hg (SCFM)	A in / mm	B in / mm	C in / mm	D in / mm	E in / mm	F in / mm	System inlet	Pump exhaust	
DSM MM1104	2	120	14.5	59 / 1500	71 / 1800	80 / 2050	58 / 1460	27 / 674	29 / 730	1 1/4" npt	1 1/4" npt	2030 / 923
DSM MM1144	3	120	19.1	59 / 1500	71 / 1800	80 / 2050	58 / 1460	27 / 674	29 / 730	1 1/4" npt	1 1/4" npt	2070 / 941
DSM MM1102	5	120	26.3	59 / 1500	71 / 1800	80 / 2050	58 / 1460	27 / 674	29 / 730	1 1/4" npt	1 1/4" npt	2050 / 932
DSM MM1142	7.5	120	34.3	59 / 1500	71 / 1800	80 / 2050	58 / 1460	27 / 674	29 / 730	1 1/4" npt	2" npt	2100 / 955
DSM MM1202	7.5	200	47	68 / 1715	73 / 1838	85 / 2153	65 / 1650	30 / 762	32 / 800	2" npt	2" npt	2365 / 1075
DSM MM1252	7.5	200	59	68 / 1715	73 / 1838	85 / 2153	65 / 1650	30 / 762	32 / 800	2" npt	2" npt	2385/ 1084
DSM MM1322	10	200	71	68 / 1715	74 / 1880	85 / 2153	65 / 1650	30 / 762	32 / 800	2" npt	2" npt	2390 / 1086
DSM MM1402	10	200	79	72 / 1816	94 / 2386	85 / 2153	70 / 1755	34 / 864	32 / 800	3" npt	3" npt	2809 / 1274
DSM MM1502	15	200	117	72 / 1816	100 / 2530	85 / 2153	70 / 1755	34 / 864	32 / 800	3" npt	3" npt	3300 / 1500

* Capacité basée sur pression barométrique de 29.92" Hg

Busch Vacuum Technics Inc.
1740, blvd. Lionel Bertrand
Boisbriand (Montreal), Quebec
Canada, J7H 1N7
Tel: 450-435-6899
Fax: 450-430-5132
Busch Direct: 1 800 363-6360
www.busch.ca

NOTES:

A- FOR MAINTENANCE & PROPER OPERATION ALLOW A MINIMUM CLEARANCE OF 36" (900mm) ON EACH SIDE OF THE SYSTEM.
B- THE RECEIVER IS COMPLETE WITH CANADIAN REGISTRATION NUMBER "CRN", THE RESERVOIR IS GALVANIZED INSIDE AND OUTSIDE.
C- THE "CSA" APPROVED CONTROL PANEL IS NEMA 12 RATED.
D- ELECTRICAL CONNECTIONS OF THE VACUUM SYSTEM ARE NOT DRAWN BUT, NOTE THAT ALL CONTROLS ARE PREWIRED BY BUSCH.
E- DRY CLEAN AIR @ 60-80psig FOR PISTON VALVE ACTUATION.
F- DIMENSIONS ARE GIVEN AS REFERENCE ONLY.
G- IN ACCORDANCE TO OUR CONTINUOUS IMPROVEMENT PLAN, SYSTEM MAY BE UPDATED WITHOUT PRIOR NOTICE.

Not to scale

This drawing is the property of Busch Vacuum Technics inc. and is not to be copied or reproduced without our expressed permission and must be returned upon request